CONFIDENTIAL 2023/04/03 (14:18:56)
This drawing is provisional and subject to our reconfirmation and/or revision without notice.

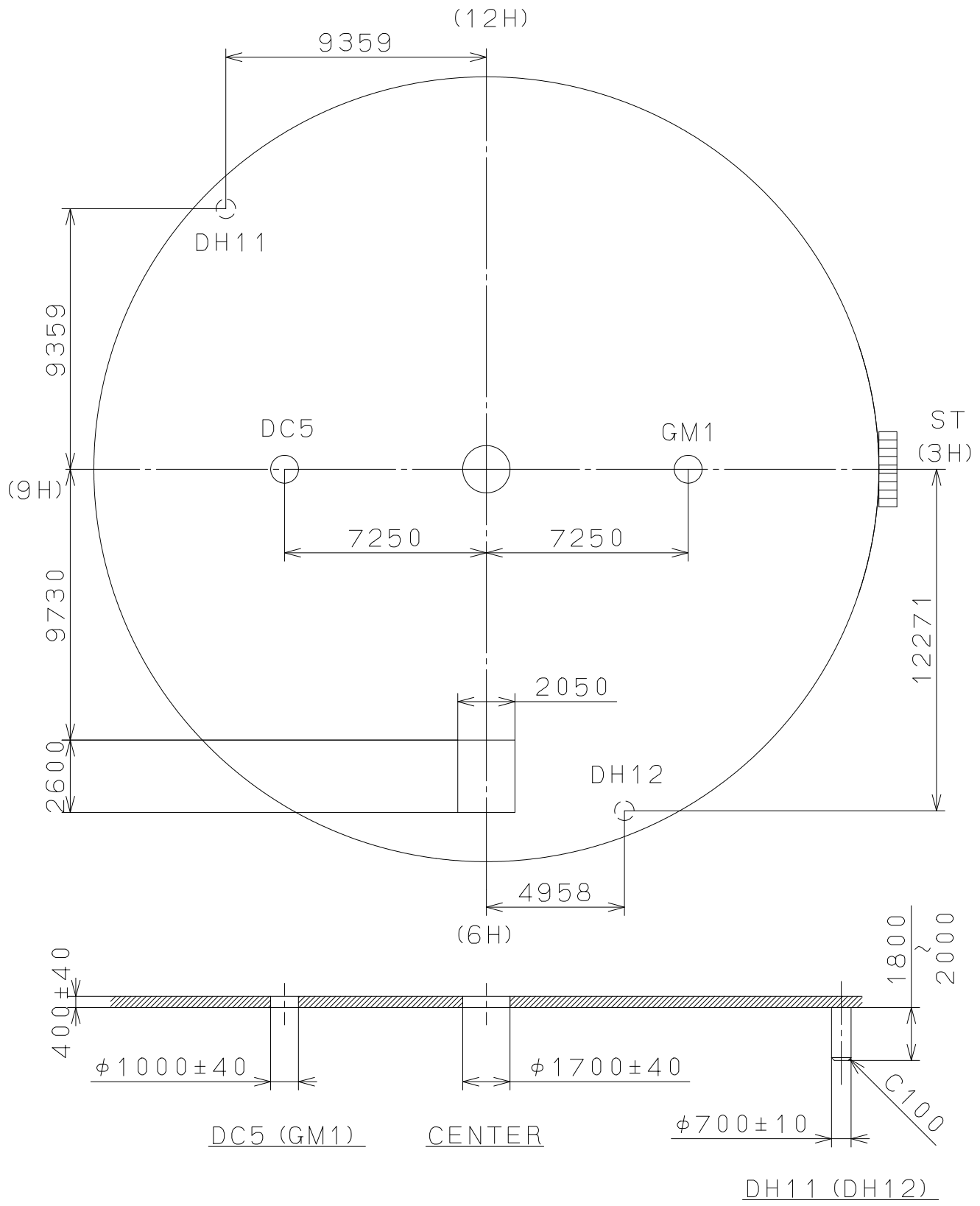

5			Quantity		Cal.NO.: JP21-00C
4			Unit	1/1000mm	
3			Scale	5 : 1	Parts No.:
2			Date		
1			Drawn		
Mark	Date	Description Appro.	Checked	D.Yamada	Name:
Alterations			Approved		Indications for Dial
Material					Drawing No.: JP2100D0
Heat Treatment			General Tolerances		MIYOTA
Hardness			Dimensions		
Plating			Angles		CITIZEN WATCH CO.,LTD. TOKYO,JAPAN