CONFIDENTIAL 2015/08/19 (08:46:57)
This drawing is provisional and subject to our reconfirmation and/or revision without notice.

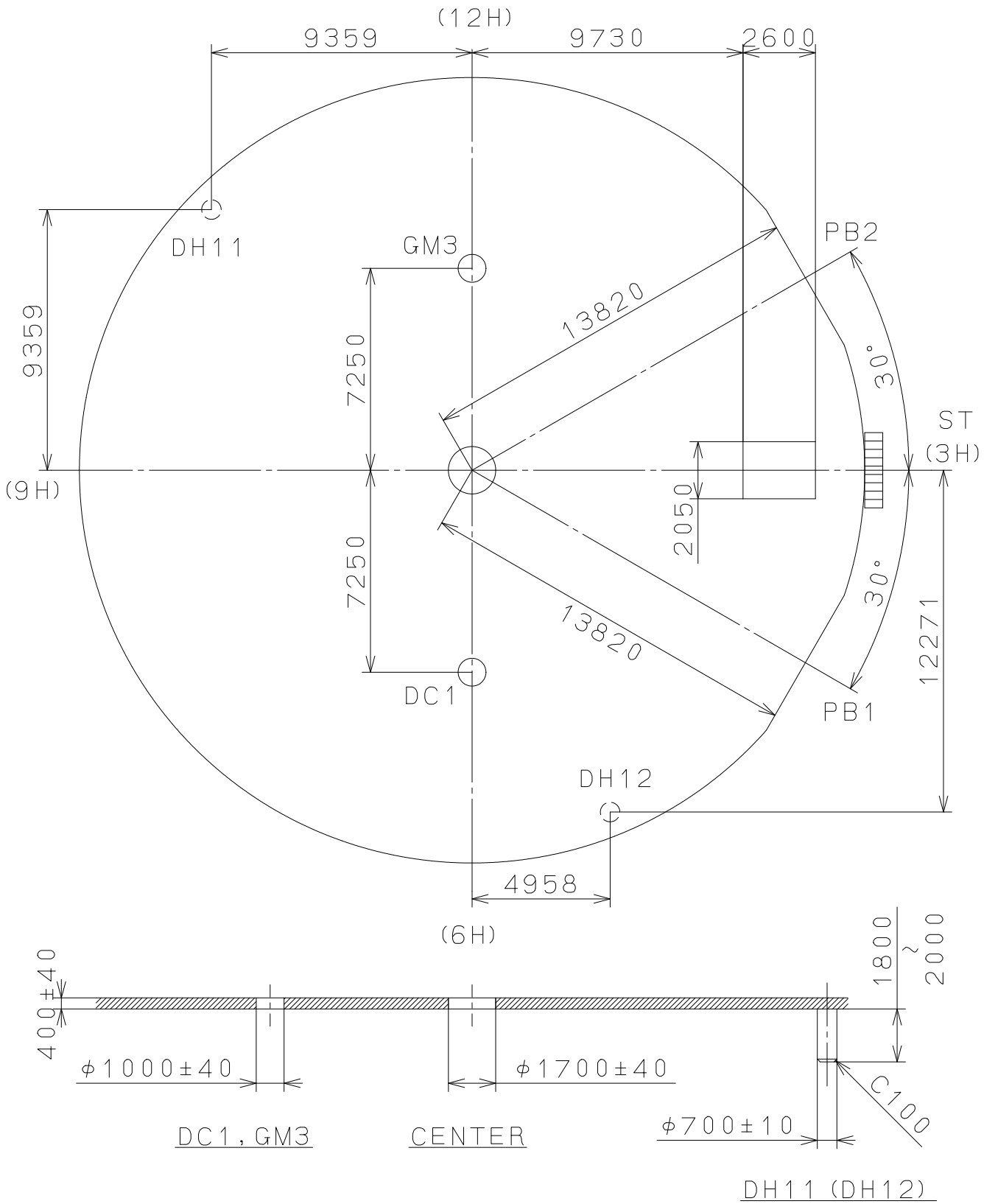

5			Quantity		Cal.NO.:
4			Unit	1/1000mm	JP11-00C
3			Scale	5 : 1	Parts No.:
2			Date		
1			Drawn		
Mark	Date	Description Appro.	Checked	M. kobayashi	Name:
Alterations			Approved		Indications for Dial
Material					Drawing No.: JP11D000
Heat Treatment			General Tolerances		MIYOTA
Hardness			Dimensions		
Plating			Angles		CITIZEN WATCH CO.,LTD. TOKYO,JAPAN