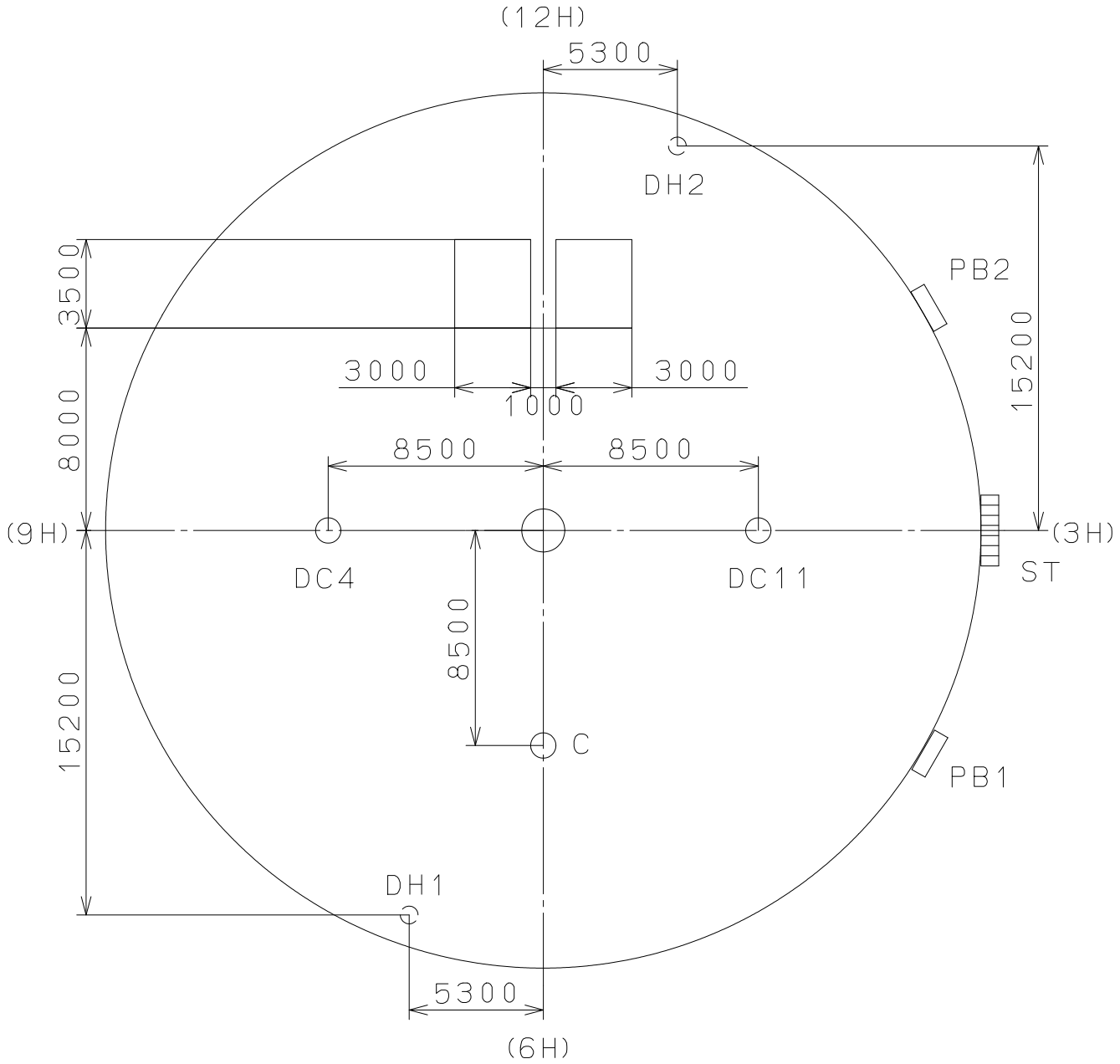

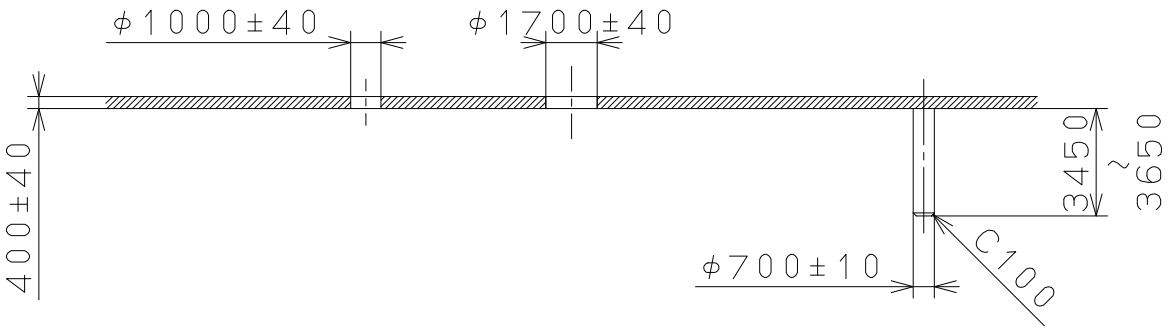

DC4、DC11、C　CENTER　DH1 (DH2)

5			Quantity		Cal.NO.: 6S50-00A
4			Unit	1/1000mm	
3			Scale	4 : 1	Parts No.:
2			Date		
1			Drawn		
Mark	Date	Description Appro.	Checked	N.Suzuki	Name:
Alterations			Approved		Indications for Dial
Material					Drawing No.:6S50D000
Heat Treatment			General Tolerances		MIYOTA
Hardness			Dimensions		
Plating			Angles		CITIZEN WATCH CO.,LTD. TOKYO,JAPAN

This drawing is provisional and subject to our reconfirmation and/or revision without notice.
2011/02/25 (10:10:16)